EXAMPLE OF CONFIGURATION

DUAL DRIVE SYSTEM TO-50BLDC

TECHNICAL DATA (VALUES PER SIDE)

GEARBOX

Max wheel torque	
- in acceleration	60 Nm
- continuously	20 Nm
Max load	250 kg
Gear ratio	1/9.9

WHEEL

Material	Polyurethane
Size	Ø100 x 50

TRACTION MOTOR

Type	Brushless DC
Power	2.1 Nm
Battery voltage	3000 rpm
Speed	48 V
Speed sensor	500 - 1000 ppr

BRAKE

Voltage	48 V
Torque	4.5 Nm

SAFETY ENCODER

up to SIL3

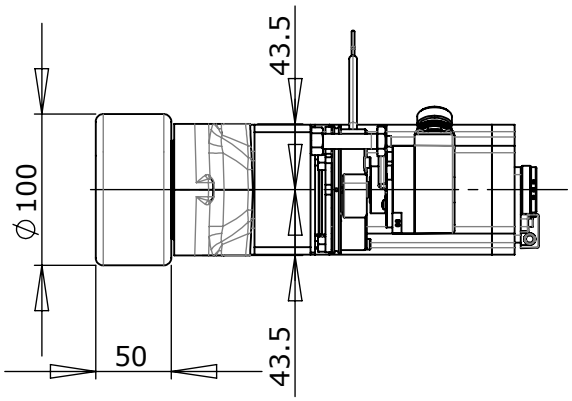

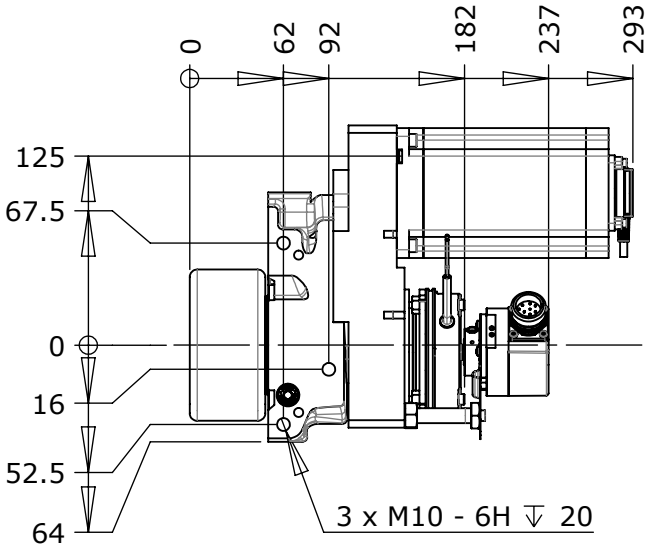

the same hole pattern on the opposite side

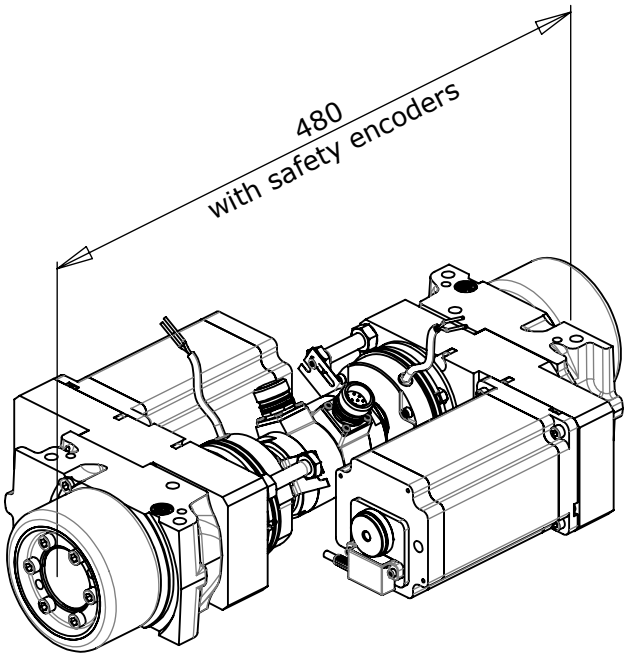

The descriptions and pictures of this datasheet are indicative. Tekno M.P.
may introduce improvements without affecting the caracteristics of the machine.

www.tekno-mp.com
info@tekno-mp.com