EXAMPLE OF CONFIGURATION

STEERING AXLE TWA-26

TECHNICAL DATA

STEERING AXLE

Max load	2600 kg

WHEEL

Material	Rubber
Size	18x7-8

STEERING MOTOR

Type	Induction motor
Power	0.7 kW
Battery voltage	24 - 48 V
Speed	2870 rpm
Speed sensor	64 ppr

STEERING

Total ratio	1/274

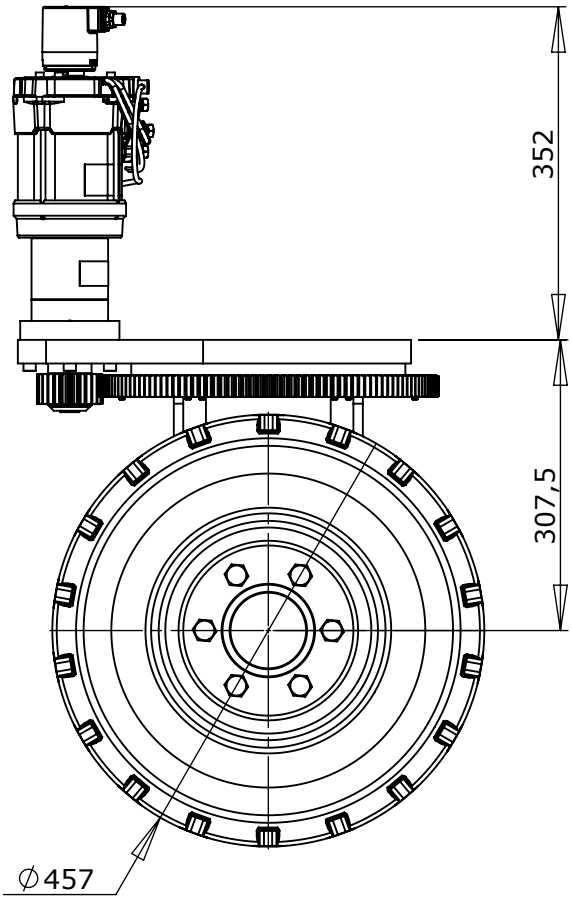

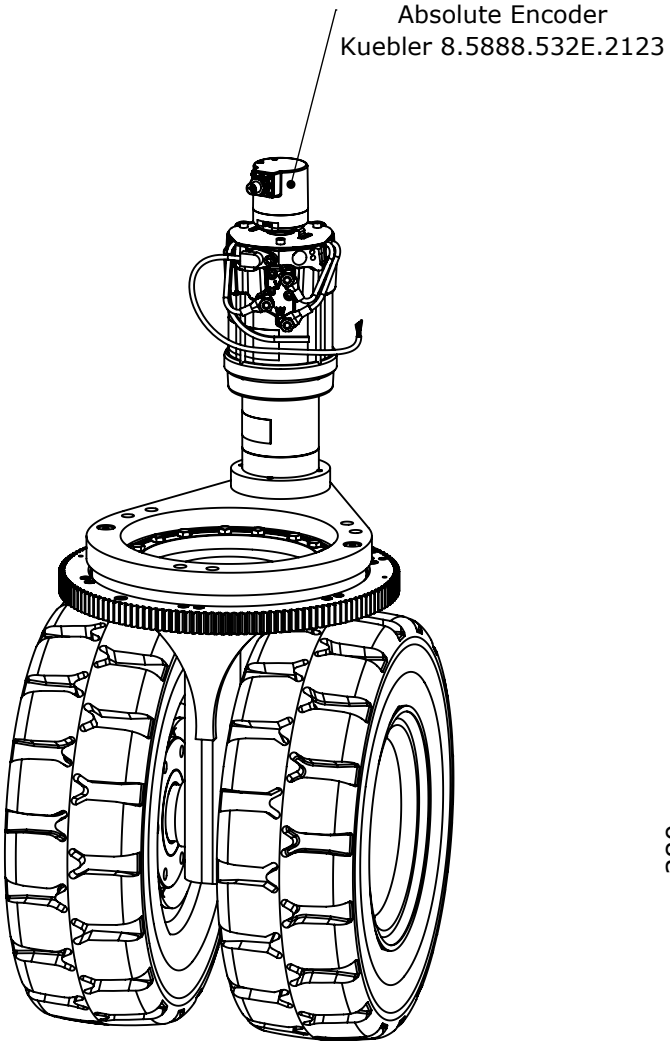

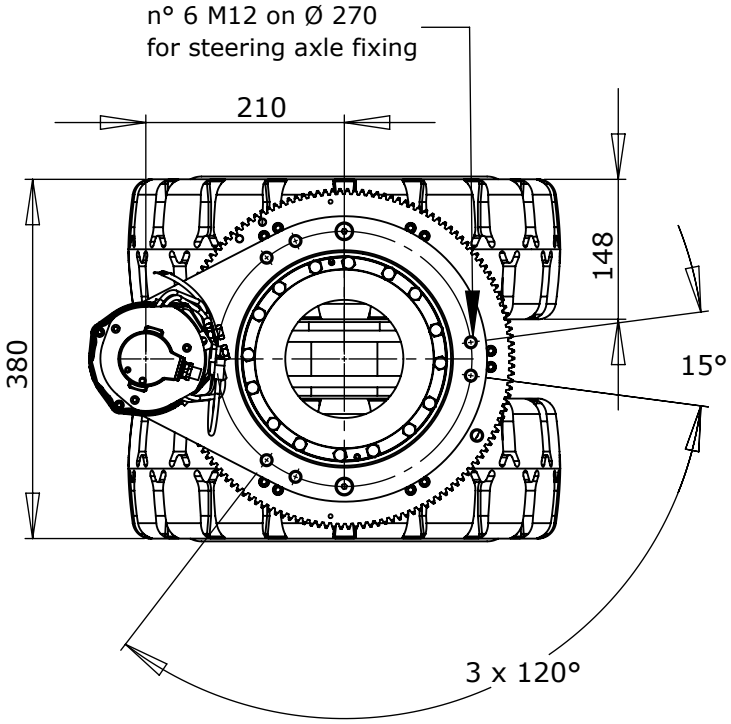

The descriptions and pictures of this datasheet are indicative. Tekno M.P.
may introduce improvements without affecting the caracteristics of the machine.

www.tekno-mp.com
info@tekno-mp.com