info@tekno-mp.com - http://www.tekno-mp.com

TVO series | TVO 130

- Compact gearboxes, ideal for electric undercarriages
- Horizontal installation in the track
- Low noise ground gears
- Low backlash gears
- Fully oil lubricated gearboxes
- High efficiency, about 95%
- 100% tested and certified drive systems
- Wide range of motors
- Easy maintenance
- ISO9001 and ISO14001 certified production system
- Made in Italy

APPLICATIONS

// Undercarriage

Undercarriage,

// Electric vehicles

Mobility, Airport, Air platforms, Any other,

AVAILABLE OPTIONS

drive unit tvo-130

- Max wheel torque in acceleration 500 Nm
- Continuous wheel torque 200 Nm
- Max load on the gearbox 1000 kg
- Gear ratio 1/32.2

wheel sizes

- Ø 300 X 75 mm

traction motor

- Type AC
- Voltage 24V - 48V
- Power 1,2 kW
- Speed 3525 rpm

brake

- Electromagnetic
- Voltage 24V – 48V
- Static brake torque 15 Nm
- Hand release lever available

Benefits

- Wide performance range
- High load capacity
- Installation space savings
- Easy fixing to the chassis
- High efficiency, low energy consumption
- Reduced backlash, low noise precision gearing
- Fully oil lubricated gearbox
- Wide range of motors
- Selectable gear ratio
- Different brake size also available with release lever
- 100% tested and certified drive system
- ISO9001, ISO14001, ISO18001 certified
- Made in Italy

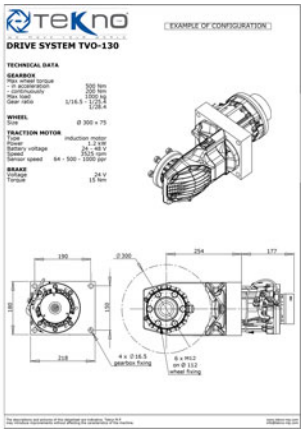
TEKNO
EXAMPLE OF CONFIGURATION
DRIVE SYSTEM TVO-130
TECHNICAL DATA
GEARBOX
Max wheel torque
- in acceleration 500 Nm
- continuously 200 Nm
Max load 1000 kg
Gear ratio 1/16.5 - 1/24.4
1/28.4
WHEEL
Size Ø 300 x 75
TRACTION MOTOR
Type induction motor
Power 1.2 kW
Battery voltage 24 - 48 V
Speed 3525 rpm
Sensor speed 64 - 500 - 1000 ppr
BRAKE
Voltage 24 V
Torque 15 Nm
190
Ø 300
254
177
180
150
218
4 x Ø 16.5
gearbox fixing
6 x M12
on Ø 112
wheel fixing