info@tekno-mp.com - http://www.tekno-mp.com

TVO series | TVO 351

- Compact gearboxes, ideal for electric undercarriages
- Horizontal installation in the track
- Low noise ground gears
- Low backlash gears
- Fully oil lubricated gearboxes
- High efficiency, about 95%
- 100% tested and certified drive systems
- Wide range of motors
- Easy maintenance
- ISO9001 and ISO14001 certified production system
- Made in Italy

APPLICATIONS

// Undercarriage

Undercarriage,

// Electric vehicles

Mobility, Airport, Air platforms, Any other,

AVAILABLE OPTIONS

drive unit tvo-351

- Max wheel torque in acceleration 1400 Nm
- Continuous wheel torque 460 Nm
- Max load on the gearbox 1000 kg
- Gear ratio 1/40

wheel sizes

- Ø 350 X 110 mm

traction motor

- Type AC
- Voltage 24V - 48V
- Power 4 kW
- Speed 2200 rpm

brake

- Electromagnetic
- Voltage 24V – 48V
- Static brake torque 90 Nm
- Hand release lever available

Benefits

- Wide performance range
- High load capacity
- Installation space savings
- Easy fixing to the chassis
- High efficiency, low energy consumption
- Reduced backlash, low noise precision gearing
- Fully oil lubricated gearbox
- Wide range of motors
- Selectable gear ratio
- Different brake size also available with release lever
- 100% tested and certified drive system
- ISO9001, ISO14001, ISO18001 certified
- Made in Italy

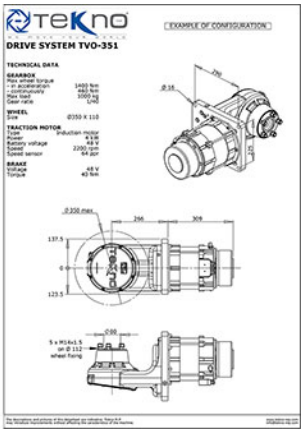
TEKNO
EXAMPLE OF CONFIGURATION
DRIVE SYSTEM TVO-351
TECHNICAL DATA
GEARBOX
Max wheel torque
- in acceleration 1400 Nm
- continuously 440 Nm
Max load 1000 kg
Gear ratio 1/40
WHEEL
Size Ø350 X 110
TRACTION MOTOR
Type Induction motor
Power 4 kW
Battery voltage 48 V
Speed 2200 rpm
Speed sensor 64 ppr
BRAKE
Voltage 48 V
Torque 40 Nm
Ø 16
Ø 250 max
256
309
137.5
0
123.5
Ø 80
5 x M14x1.5
on Ø 112
wheel fixing